MULLUKURICHI 300 ST SCHOOL BOYS HOSTEL

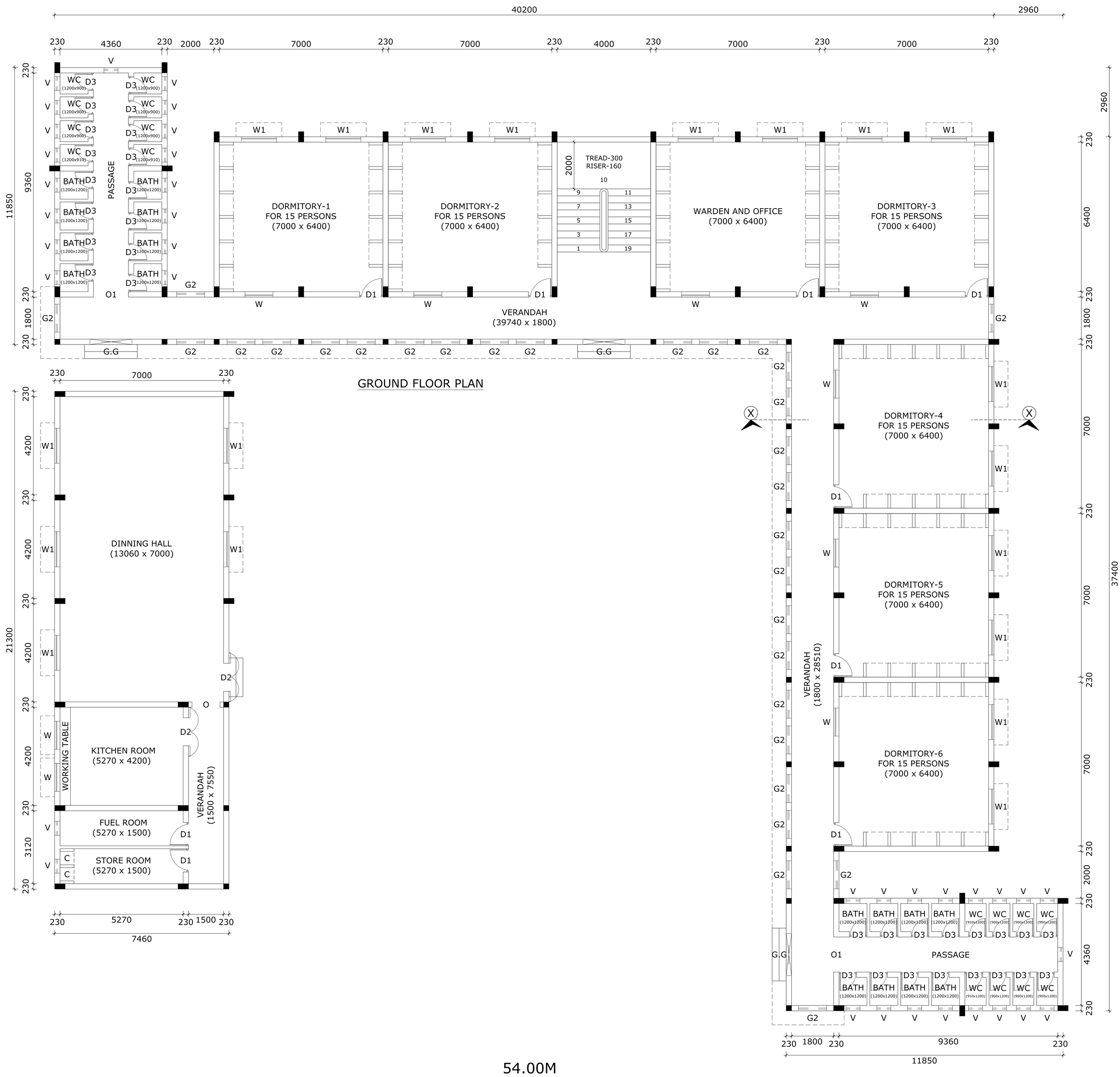

GROUND FLOOR PLAN

THAMMAMPATTY ROAD

LAYOUT PLAN

ELEVATION

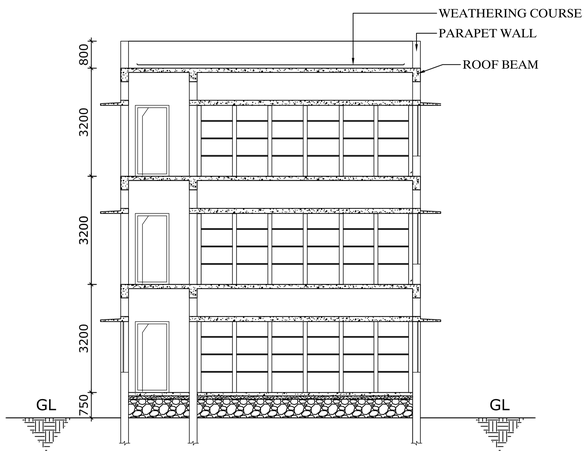

SECTION AT XX

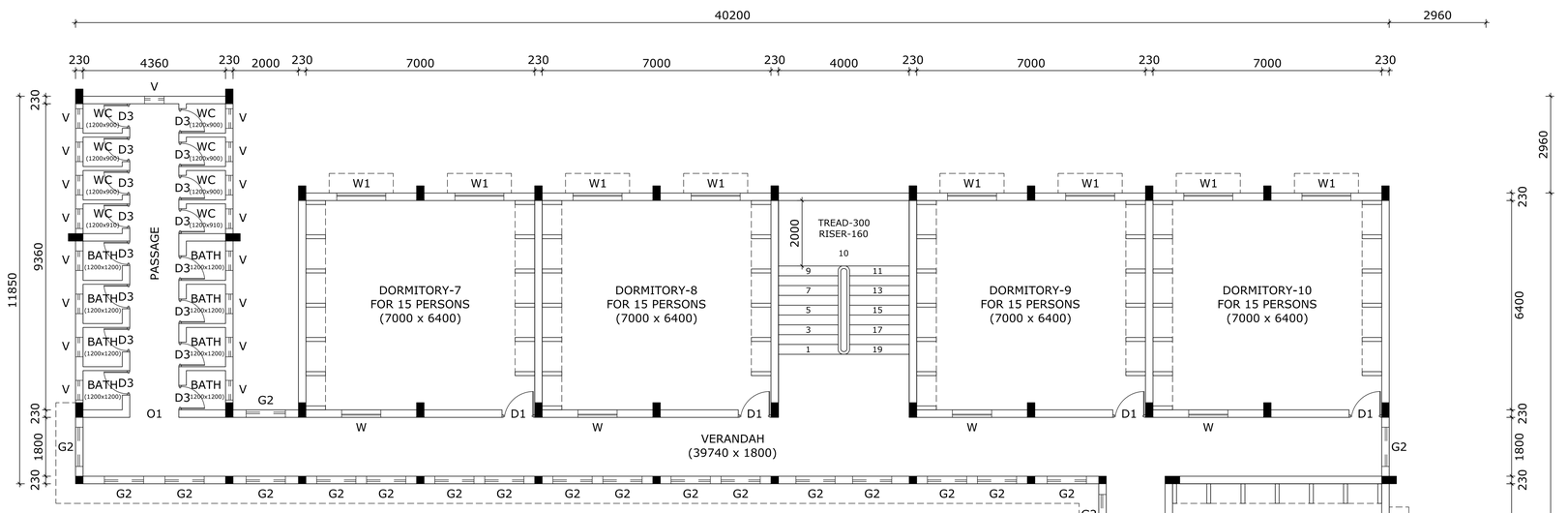

TYPICAL FLOOR PLAN

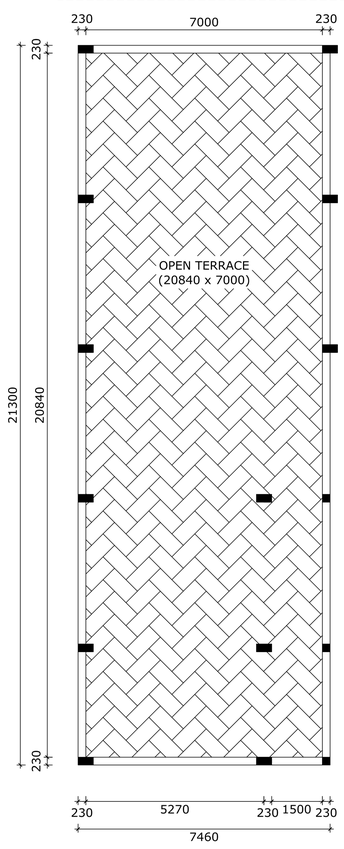

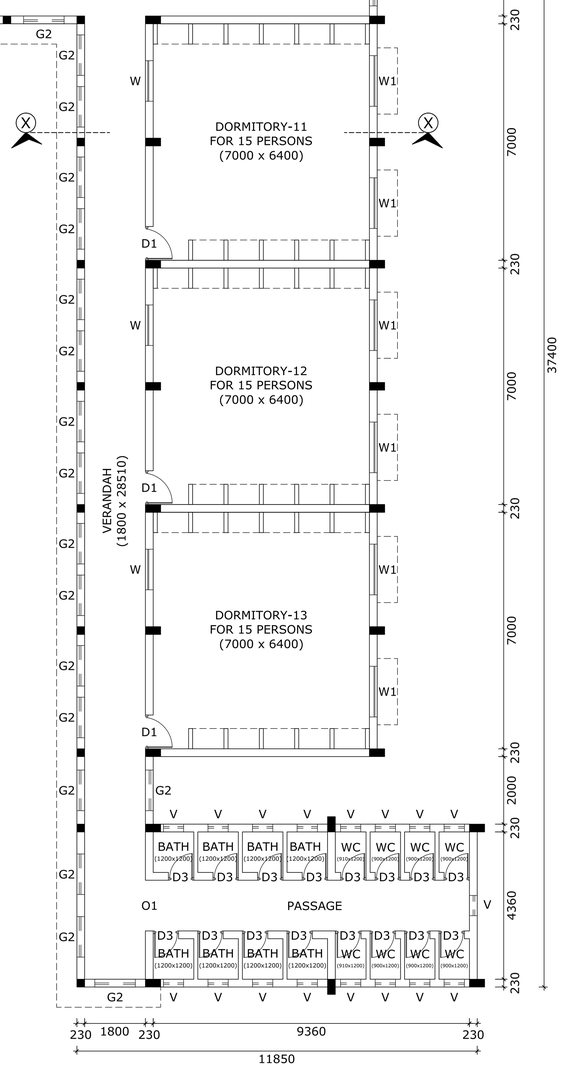

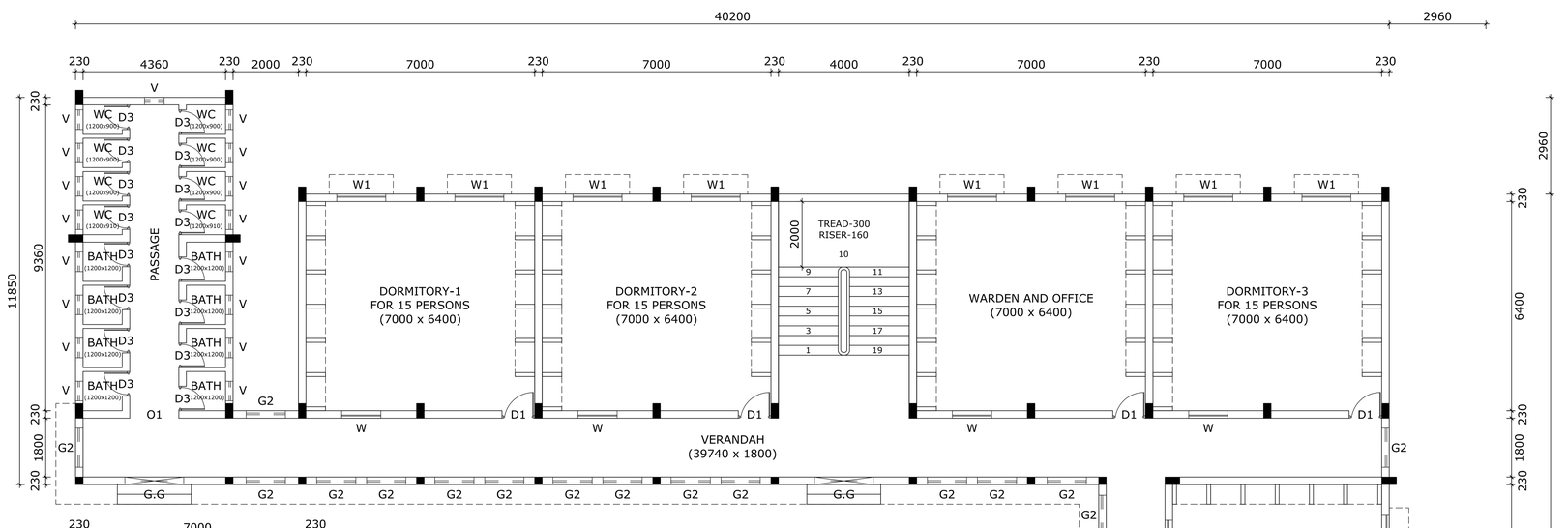

GROUND FLOOR PLAN

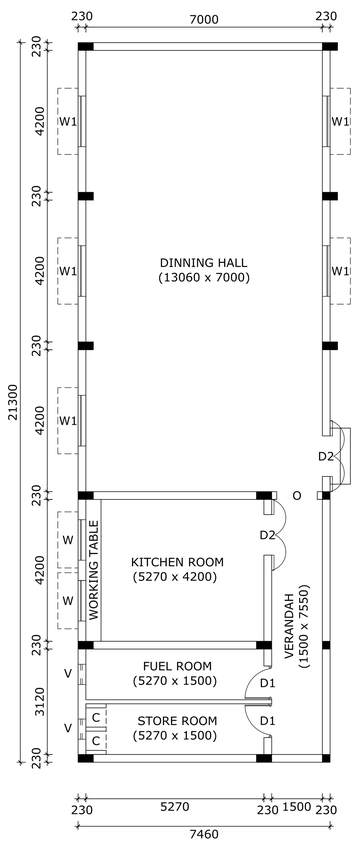

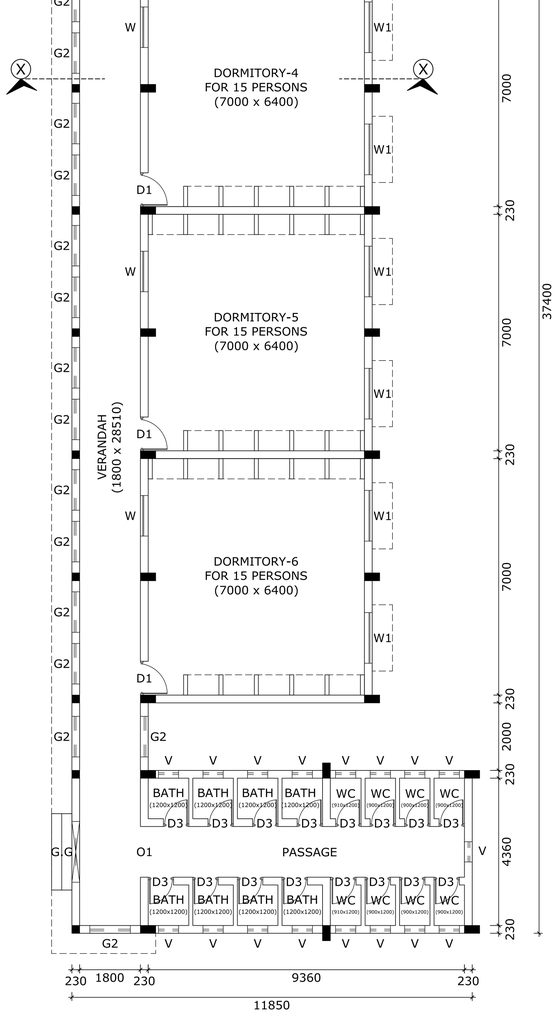

TAMILNADU ADIDRAVIDAR HOUSING AND DEVELOPMENT CORPORATION LTD., CHENNAI - 600 018.

N

SCHEDULE OF JOINERY

SL.NO	TYPE	SIZE WIDTH	SIZE HEIGHT	SILL	TOP	DESCRIPTION	REMARKS
1.	D1	1000	2100	-	2100	STEEL DOOR	SINGLE LEAF
2.	D2	1200	2100	-	2100	STEEL DOOR	DOUBLE LEAF
3.	D3	750	2100	-	2100	SOLID CORE PVC DOORS	SINGLE LEAF
4.	GG	1500	2100	-	2100	GRILL GATE	FIXED
5.	O	1200	2100	-	2100	OPENING	-
6.	O1	1500	2100	-	2100	OPENING	-
7.	G2	1200	1300	800	2100	GRILL WINDOW	FIXED
8.	W	1200	1300	800	2100	STEEL WINDOWS WITH GUARD BARS	2 SHUTTERS
9.	W1	1500	1300	800	2100	STEEL WINDOWS WITH GUARD BARS	3 SHUTTERS
10.	V	600	600	1500	2100	VENTILATOR	FIXED

SL.NO	NOTES
1.	ALL DIMENSIONS ARE IN mm
2.	THIS IS A DETAILED DRAWING
3	GROUND FLOOR - 771.74 SQM / 8307.01 SQF FIRST FLOOR - 612.84 SQM / 6596.61 SQF SECOND FLOOR - 612.84 SQM / 6596.61 SQF

ASSISTANT ENGINEER,
TAHDCO SALEM.

ASSISTANT EXECUTIVE ENGINEER,
TAHDCO SALEM.

EXECUTIVE ENGINEER,
TAHDCO SALEM.

GENERAL MANAGER (TECHNICAL)
TAHDCO HEAD OFFICE CHENNAI - 18

SCALE : 1: 100		DATE:
DEALT:	JOB NO:	DRG.NO:
CHECKED:		

CONSTRUCTION OF 300 ST SCHOOL BOYS HOSTEL
AT MULLUKURICHI IN NAMAKKAL DISTRICT.

GROUND FLOOR, FIRST FLOOR & SECOND FLOOR PLAN
ELEVATION, SECTION & DETAIL PLAN

CONSTRUCTION OF SEPTIC TANK (2 UNITS) FOR 300 ST SCHOOL BOYS HOSTEL

AT MULLUKURICHI IN NAMAKKAL DISTRICT.

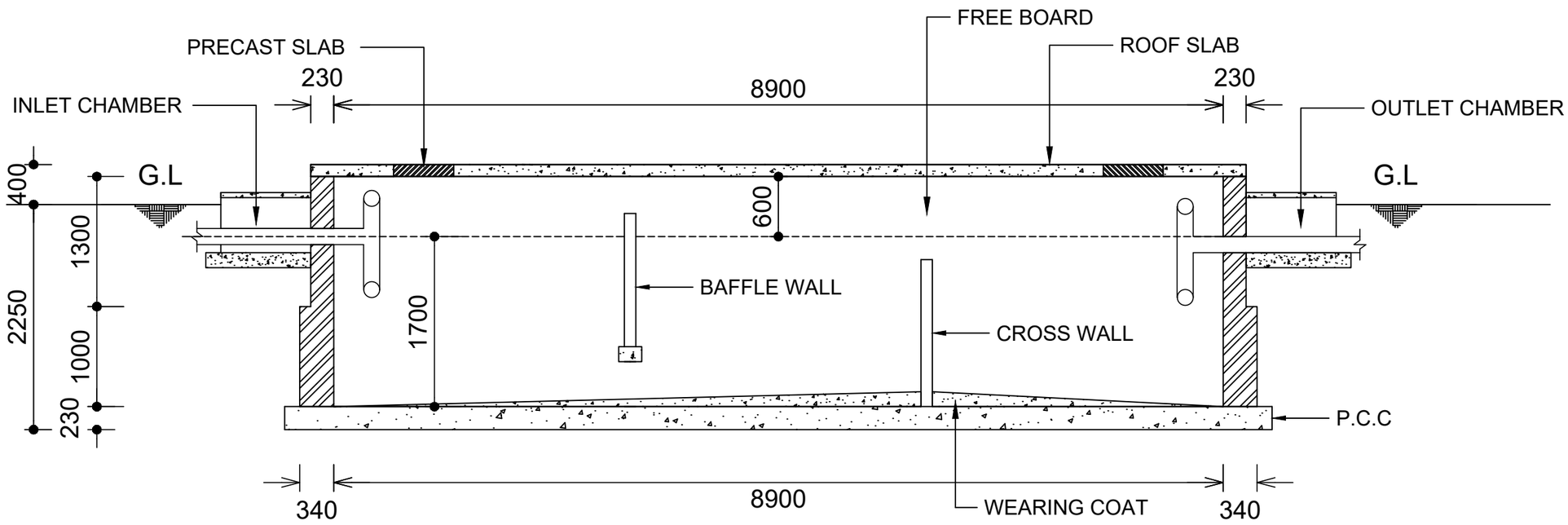

CROSS SECTION

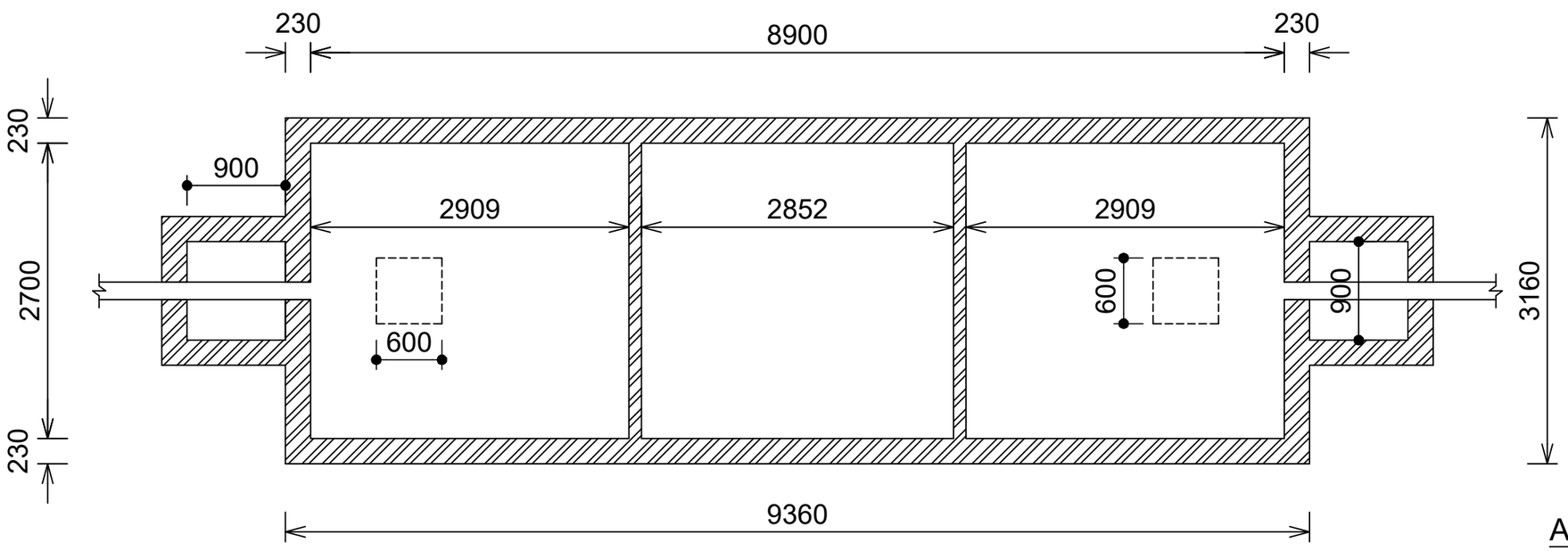

PLAN

ALL DIMENSIONS ARE IN MILLIMETERS

SCALE :- 1: 50

CONSTRUCTION OF SUMP TO 300 ST SCHOOL BOYS HOSTEL

AT MULLUKURICH IN NAMAKKAL DISTRICT.

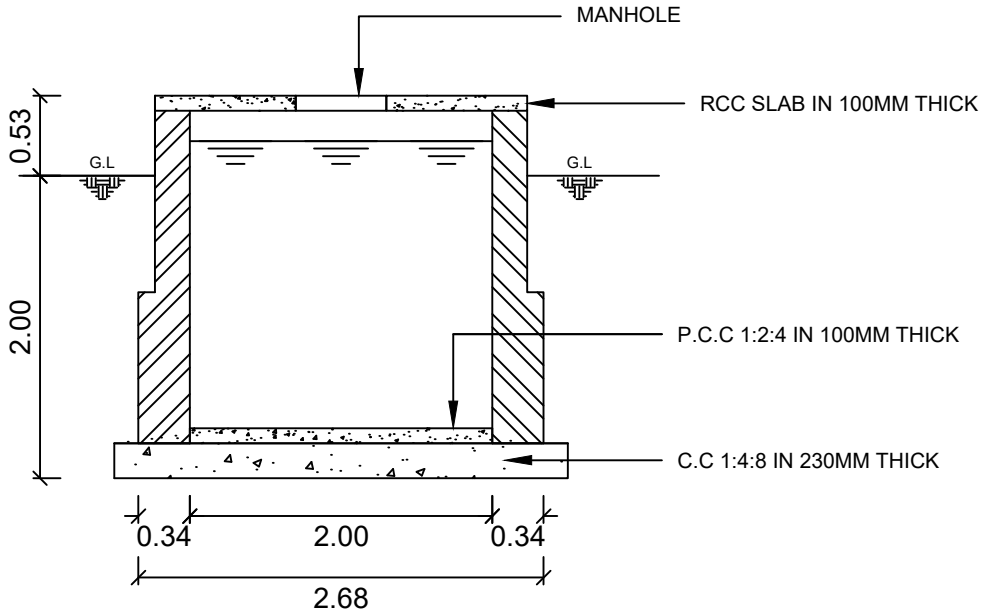

SECTION

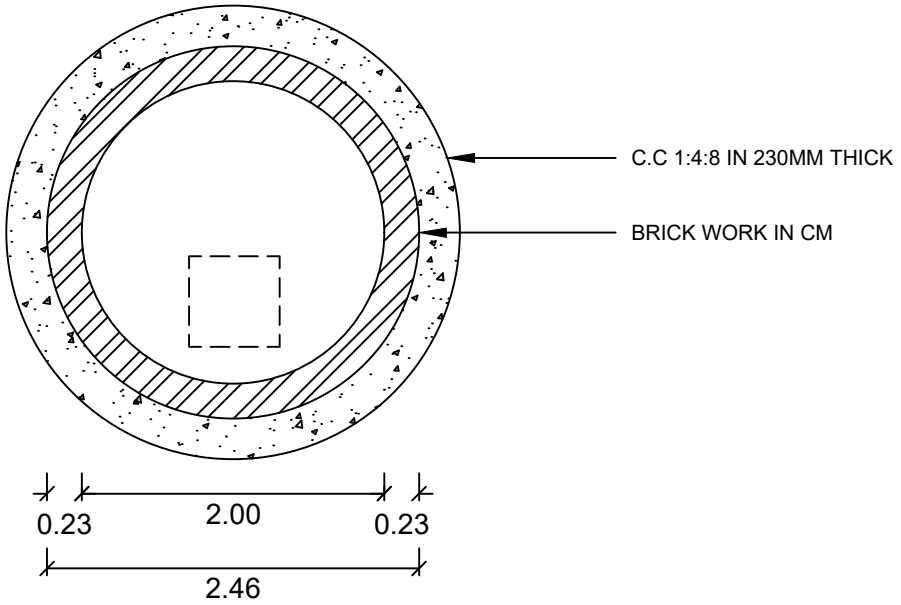

PLAN

ALL DIMENSIONS ARE IN MILLIMETER

SCALE :- 1:50

CONSTRUCTION OF 300 ST SCHOOLBOYS HOSTEL

AT MULLUKURICHI IN NAMAKKAL DISTRICT.

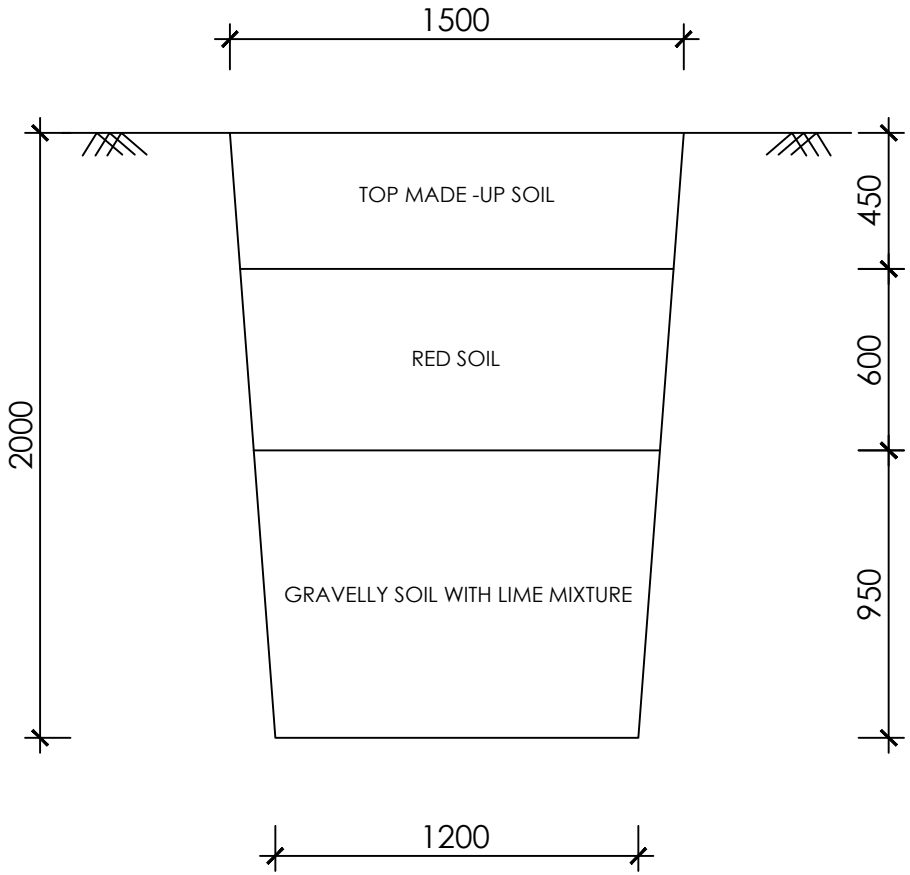

TRIAL PIT